Xcelsior CHARGE H2™

Michael McDonald, Operations Manager

Vehicle Innovation Center

Highlights

300

Over 300 events and training sessions have been hosted since opening in 2017.

5,000

More than 5,000 industry leaders have visited and learned from our VIC experts.

50 years

50 years of experienced manufacturing zero-emission buses.

50 million

More than 50 million EV miles of experience.

Welcome to the VIC

Our Vision

"To be North America's leader in the exploration and advancement of bus and coach technology connecting people to places"

- First innovation lab of its kind in North America, opened October 2017
- Lead exploration and innovation technology for bus & coach applications
- EV and AV technologies
- Manufacturing innovation lab
- Interactive exhibits
- Virtual reality learning displays
- Electric bus driving simulator

How To Move a Bus

Internal combustion engine

- Dino juice + O_2 = explosion + CO_2 + H_2O
- Diesel, CNG (NFI: 1990s)

Electric drive

- Electricity → electric motors
- Trolley (NFI: late 1960s)

- Battery-electric (BEB) (NFI: early 2010s)
  - "Plug" → portable
- Hybrid (diesel-electric) (NFI: early 2000s)
  - Acceleration, low speed, regen: e-drive
  - Steady drive: ICE
- Fuel cell-electric (NFI: early 90s)
  - Lessons from BEB + Hybrid + CNG

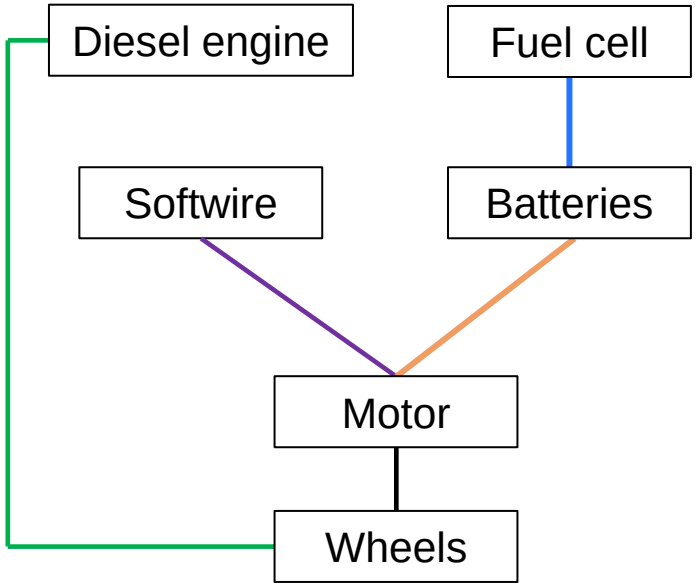

EV Propulsion at a Glance

Electric Drive vs. Internal Combustion Engine (ICE)

	Conventional	Battery-Electric	Fuel Cell-Electric
Energy Storage	Diesel fuel	Batteries	Hydrogen/Batteries
Energy Conversion	ICE	Batteries	Fuel Cell
Transmission	Gearbox	Direct Drive	Direct Drive
Traction	ICE	PEM* A/C Motor	PEM A/C Motor
Accessories	ICE belt-driven	Electric motor-driven	Electric motor-driven
Heating	ICE waste	Electric	FC waste/electric

*Permanent Magnet Motor (PEM)

Why Fuel Cell-Electric Bus (FCEB)?

- Zero-emissions*

  *anthropogenic carbonaceous molecules linked to excessive atmospheric solar absorption emissions

- Extended range
  - Far-superior energy density of Hydrogen (H_2) vs. Li-ion batteries
  - Limited by how much H_2 you can carry
- Fast re-fuel
  - No slow charge or specialized infrastructure for fast charging
- Free heat!
  - Capture waste like in ICE vehicles
  - Further enhances range in cold
- **Performs like a diesel**
  - 1:1 bus substitution ($)
  - Benefits of e-drive
    - Low maintenance ($)
    - Quiet
    - Smooth performance

FCE Drive Summary

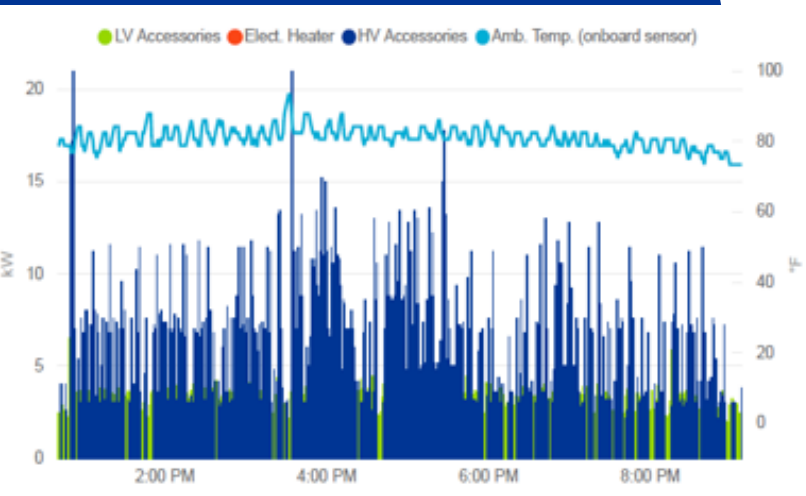

- It's an electric bus
  - **Fuel cell enables electric drive**
  - An onboard "gas battery"
  - Combines the best of all propulsion systems
- Batteries are power-dense, H_2 is energy-dense
- Drive cycles are erratic:
  - Constantly accelerating & decelerating
  - Batteries can handle that
  - Fuel cells cannot accommodate constantly changing power demand; provide steady power delivery
  - Batteries mediate power demand in FCEBs
  - **Fuel cells are a range extender/onboard ESS charger**

Onboard H_2

- Compressed (350 bar/5000 psi) in specialized tanks
- H_2 is the fuel/energy
- Requires conversion
- ICE: ignite fuel → heat → pressure → mechanical
- 25 – 35% efficient
- Increase efficiency by converting to **electricity** (~50 – 60%)

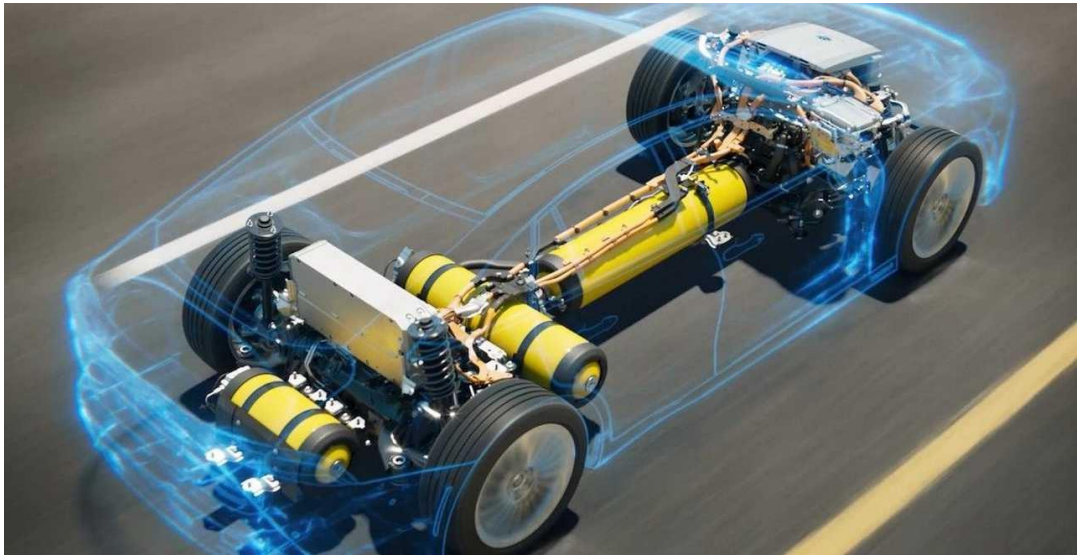

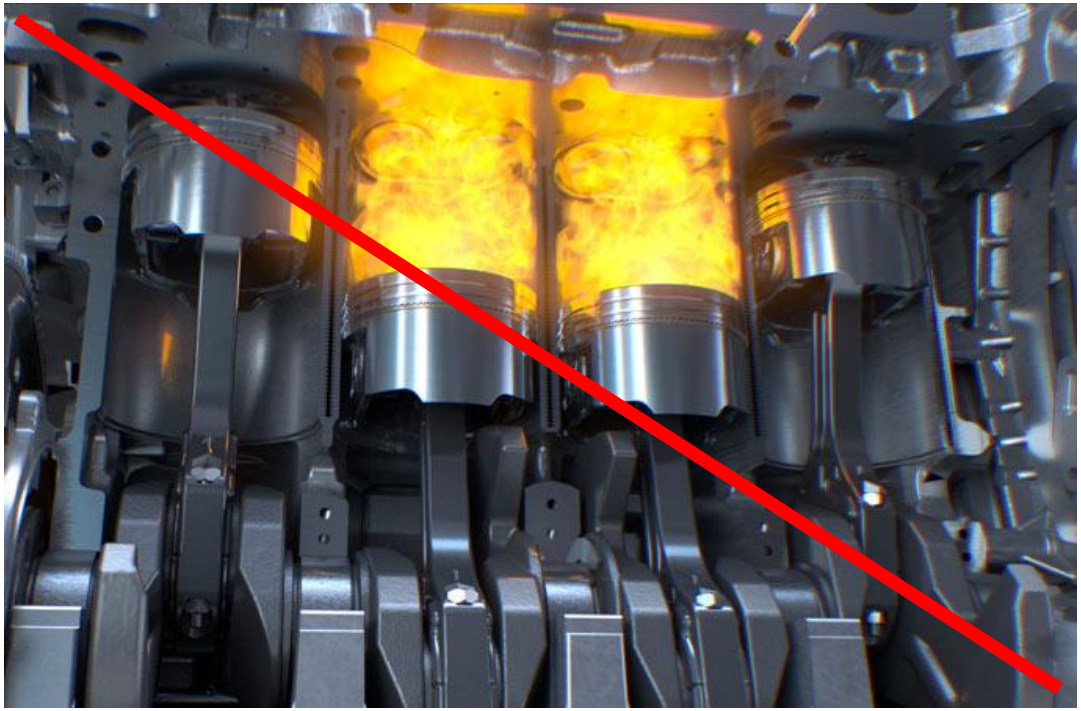

Chemistry of Hydrogen (H_2) Energy

ICE: 25 – 35% efficient

Convert H_2 to electricity in a **fuel cell**

$$H_2 + \tfrac{1}{2}O_2 \rightarrow \text{energy} + H_2O$$

$$H_2 \rightarrow 2H^+ + 2e^-$$

oxidation (anodic)

$$2e^- + 2H^+ + \tfrac{1}{2}O_2 + \rightarrow H_2O$$

reduction (cathodic)

- Spatially separate half-reactions
- ***Electrochemical conversion***
- "Organized combustion"

- No carbonaceous emissions
- Low mechanical
  - Efficient
  - Low noise

How Do Fuel Cells Work?

Graphite flow plates

- Current collectors
- Bipolar

Electrons from H_2 are captured as electric current.

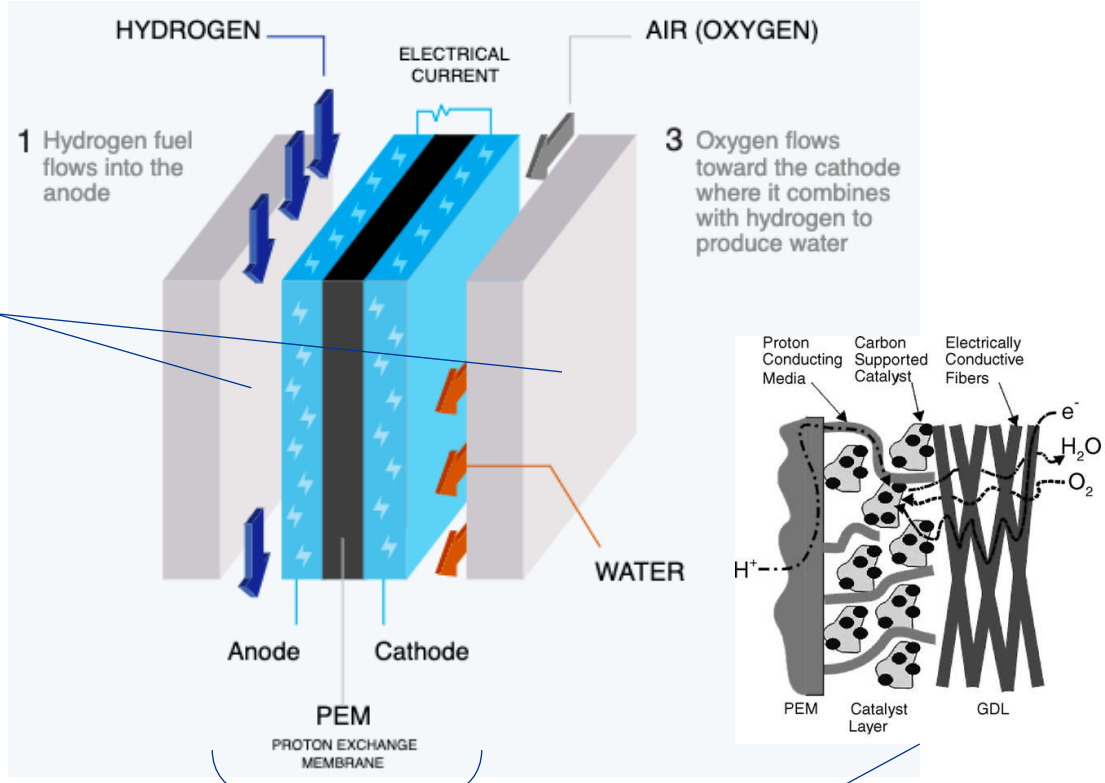

Membrane-electrode assembly (**MEA**)

- Catalytic: Platinum (Pt)
- Solid electrolyte/separator: Nafion

Commercial Fuel Cells for NFI

- Produce 0.6 – 0.8 V per cell (v 1.23 V thermodynamic potential)
- Electrodes convert and are not "consumed"
  - Available energy external and "unlimited"
- Balance-of-plant subsystems
  - Air intake (compressor)
  - Air scrubbing
  - Thermal management
  - Pressure regulation
  - Exhaust system

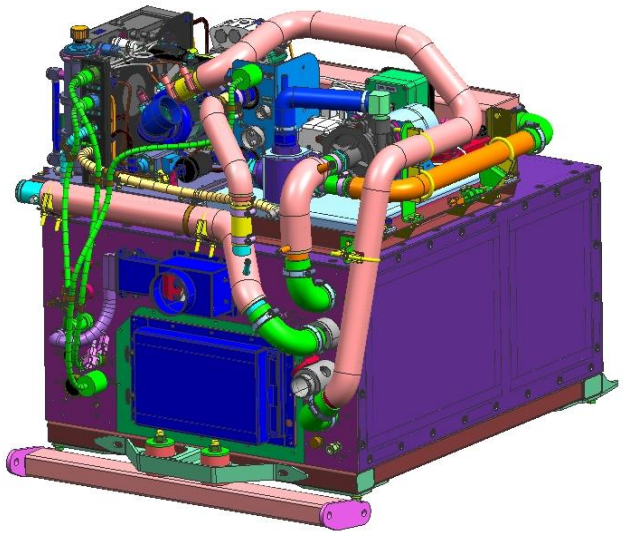

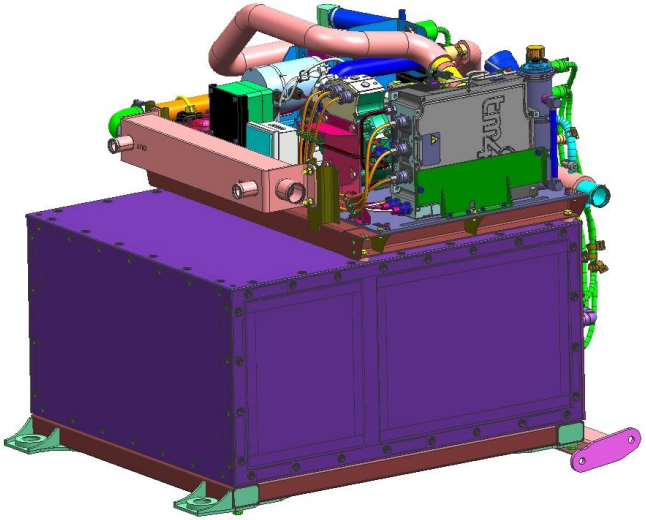

Tank Modules & Fill Panel

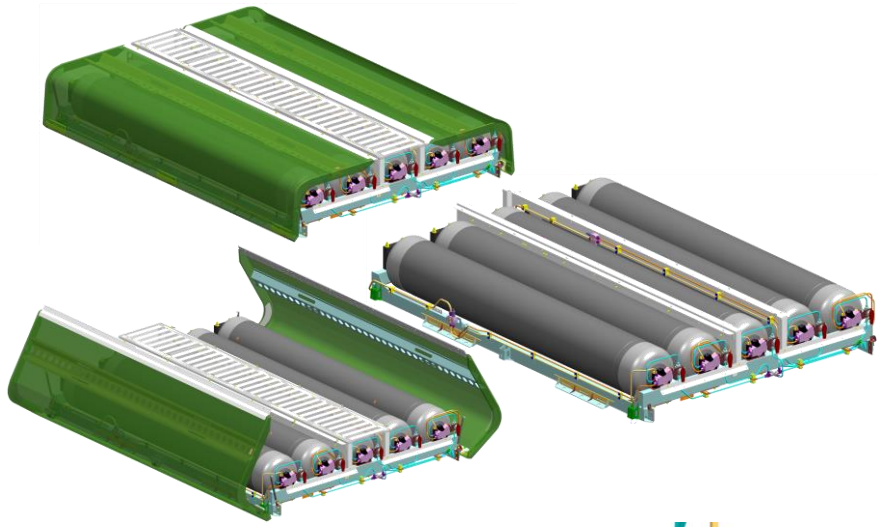

Tank Modules

- All-composite (Hexagon)
- 7.5 kg H_2
- **350 bar** (15 °C)
- 98 kg empty (excluding valve & mounting)
- Ø16.3” x 125” long
- HGV2 / EC79 certified
- 20-year service life

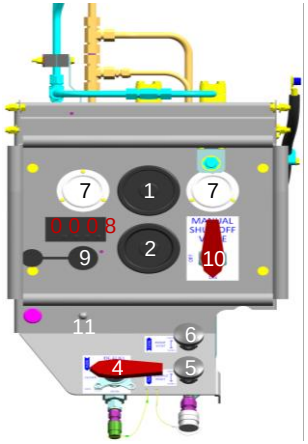

Fill Panel

- Dual H35 fill receptacles
  - WEH TN1 HF (1) & WEH TN5 (2)
  - Inline Check Valves (3)
- Prepared for IrDA communication w/ fill station
- Lower service panel
  - HP Defuel Port (4)
  - LP Sample Port (5)
  - LP Vent to Roof Stack (6)
- HP & LP Analog Gauges (7) & HP Digital Gauge (8)

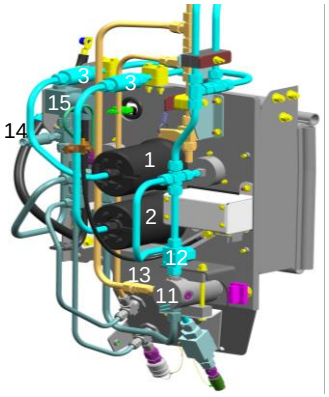

H_2 Safety

Kidde dual spectrum sensors provide:

- Hydrogen fire detection
- Hydrogen leak detection

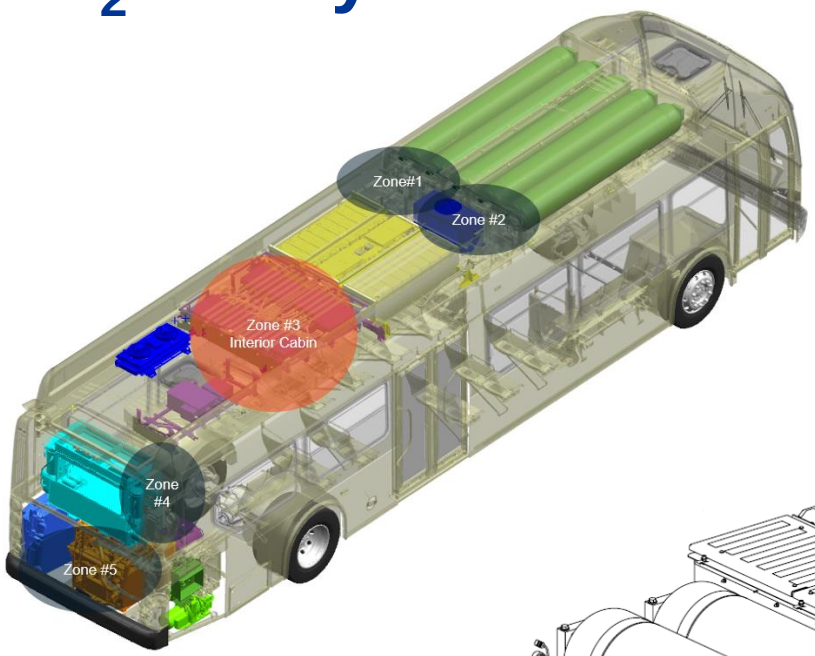

Future Development
Test port to verify Tank Pressure without isolating all other tanks

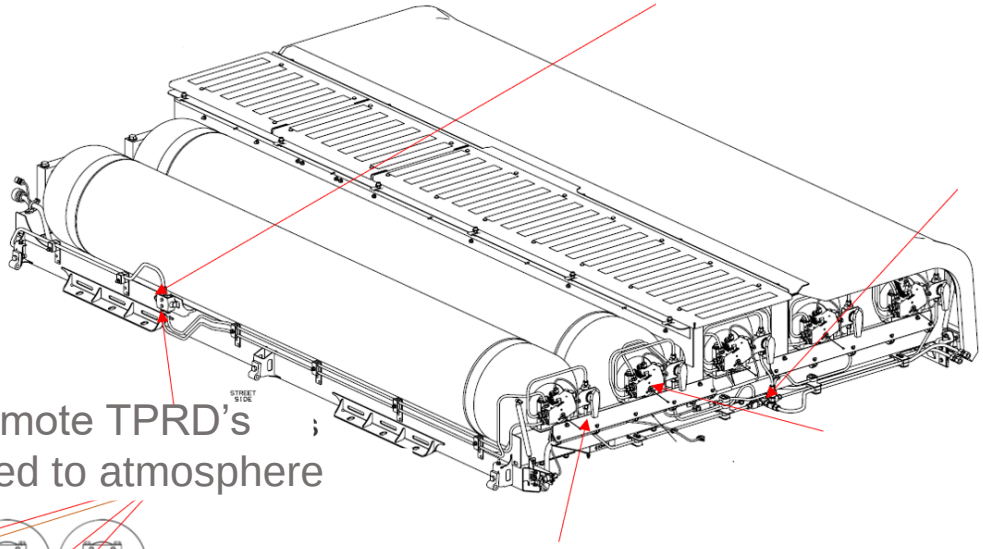

Impact Sensor

SS Remote TPRD's plumbed to atmosphere

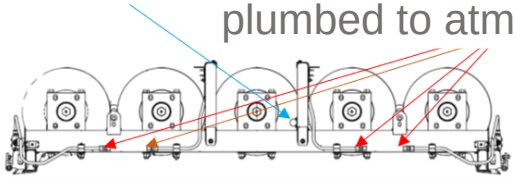

Tank Isolation Valves

Energy Storage System (ESS) Battery

Xcelsior CHARGE NG™ Battery Systems are designed for a wide variety of routes and demanding environmental conditions

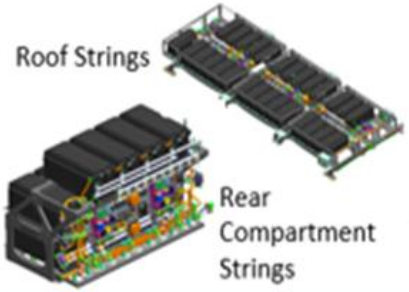

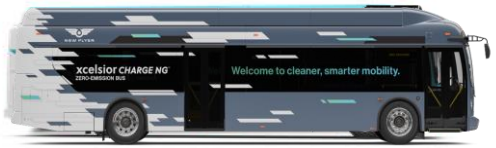

Battery Supplier			New Flyer	
Cell	**Sub-Pack**	**Controls**	**Strings**	**Bus**
Cells designed for long life under tough conditions.	Cells and liquid cooling fins are stacked and retained within the sub-pack, along with temperature and voltage monitoring circuits.	The BMS (Battery Management System) monitors every cell and provides real-time state-of-charge, power, and safety protection.	The sub-packs are grouped in high-voltage “strings” and housed in environmentally sealed enclosures. Multiple strings are connected in parallel, providing the necessary power and energy.	Depending on the size and expected routes of the bus, the required number of strings are installed and connected to the propulsion system’s power and control electronics, as well as the battery cooling system.

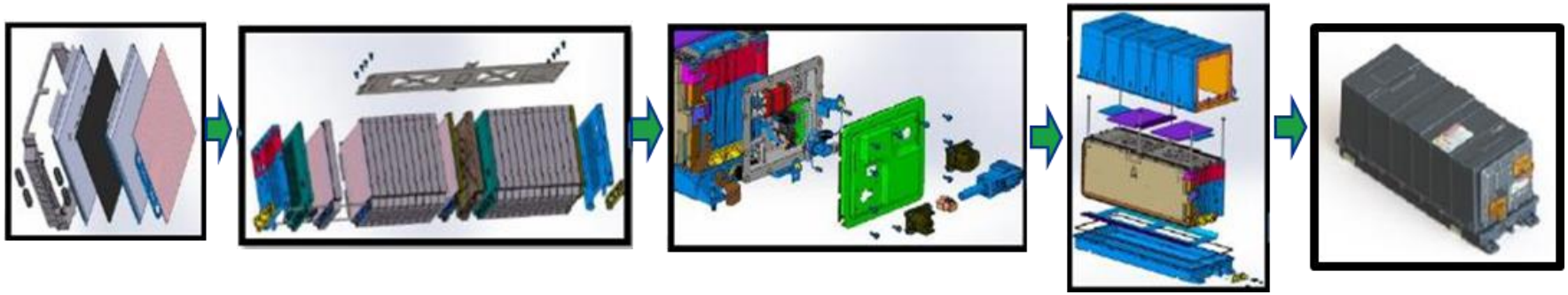

Energy Storage System (ESS) Subpacks

Subpack Level

- Balance-of-plant integration
- Battery management system (BMS)
- Modular, plug-and-play

Current ELFA 2 motor, uses an encoder sensor to verify motor rotation

- The Permanent Magnet Motor (PEM) is a twelve-pole excited three phase permanent synchronous motor.
- The motor is cooled by means of a water cooling circuits.

Propulsion System Drive Motor

Advantages:

- No additional gearbox necessary
- No noise, no maintenance
- Conventional drive technology integration
- Higher power density than ASM
- Higher efficiency and lower energy consumption than ASM
- Good scalability of power by adaptation of motor length
- Low need of current compared to ASM
- Significantly lower life cycle costs by investment and fuel efficiency

Propulsion System Power Management

Type	Inverter 3 Phases & 1 Phase for Chopper or DC/DC converter
Cooling Media	Water-Glycol
Rated Voltage DC	650 V
Operating Voltage DC	300 V - 750 V
Rated Current Inverter	250 A
Rated Power Inverter (460V AC)	200 KVA
Max. Current Inverter (10 s)	350 A
Max. Power (500V AC)	320 KVA
Switching Frequency Inverter	2 - 6 KHz
Rated Current Chopper or DCDC	1 x 150A (@ 6 kHz) 1 x 300A (@ 0 kHz)
Switching Frequency Chopper & DCDC	2 - 6 KHz
Weight	30 kg
Dim. (wxlxh) without Connectors	411 x 454 x 183 mm
Degree of Protection	IP 6K9K
Ambient Temperature	- 25 °C to 50 °C (for rated values)

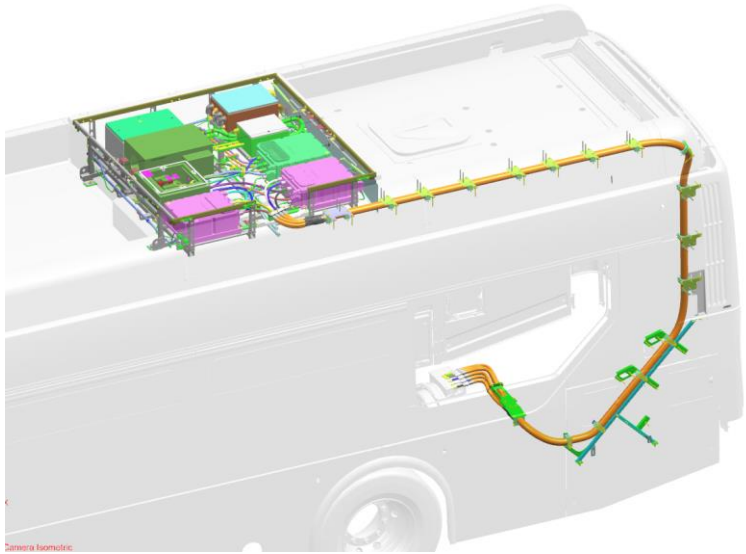

Electric Drive Accessories

Electric

- A/C compressor
- Heater
- Power steering pump
- Air compressor
- Thermal management
  - Radiator fans, coolant pumps

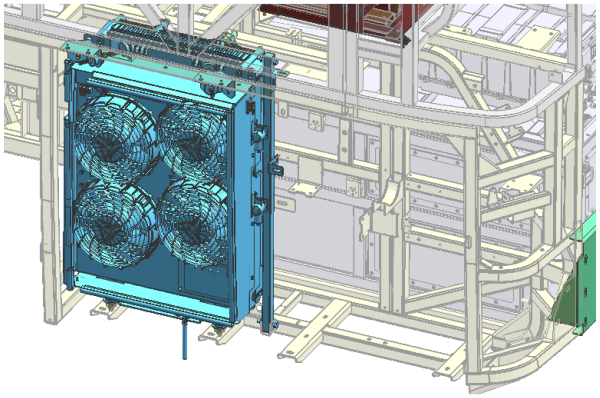

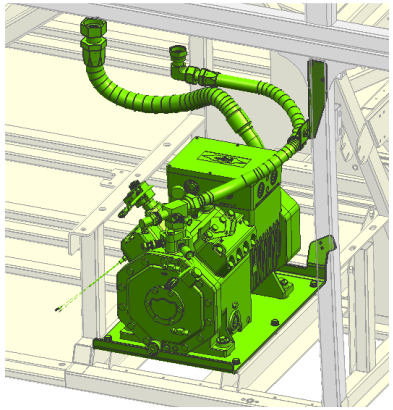

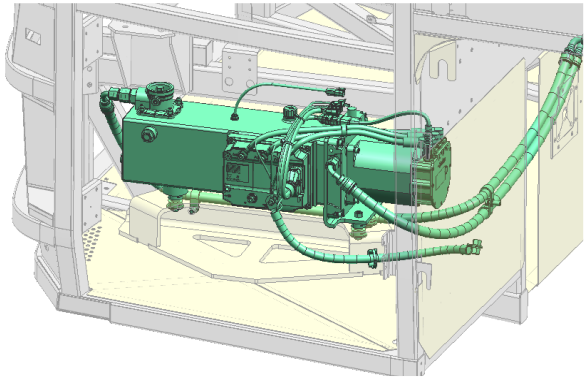

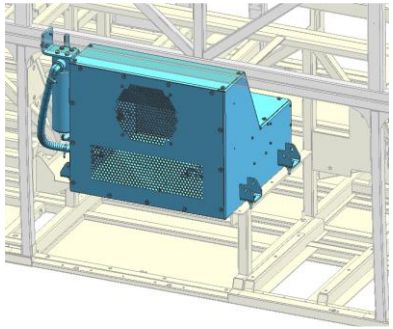

Xcelsior® Heavy-Duty Transit Buses

Low Emissions

Clean Diesel

Natural Gas

Hybrid-Electric

Zero Emissions

Trolley-Electric

xcelsior CHARGE NG™

xcelsior CHARGE H2™

Transforming your community with sustainable, clean transit technology.

- Proven Heavy-Duty Bus Platform
- Introduced in 2010
- Over 1 billion miles of revenue service
- Superior performance at Altoona
- Quietest ride
- Built for accessibility
- Designed for maintainability
- BRT styling and optional features
- Over 14,000 Xcelsior® buses currently on the road

New Flyer Xcelsior CHARGE H2™ Integration & Layout

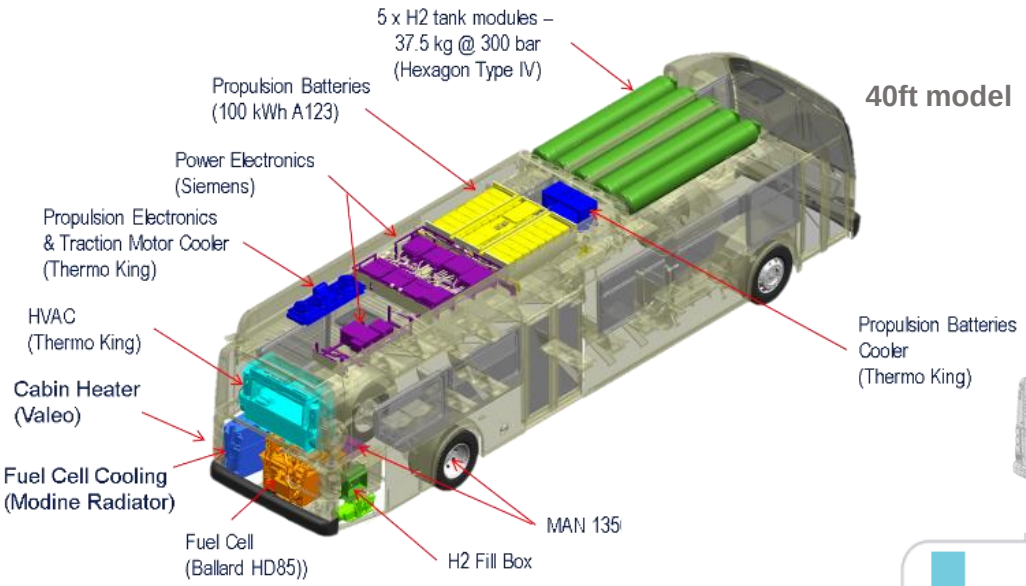

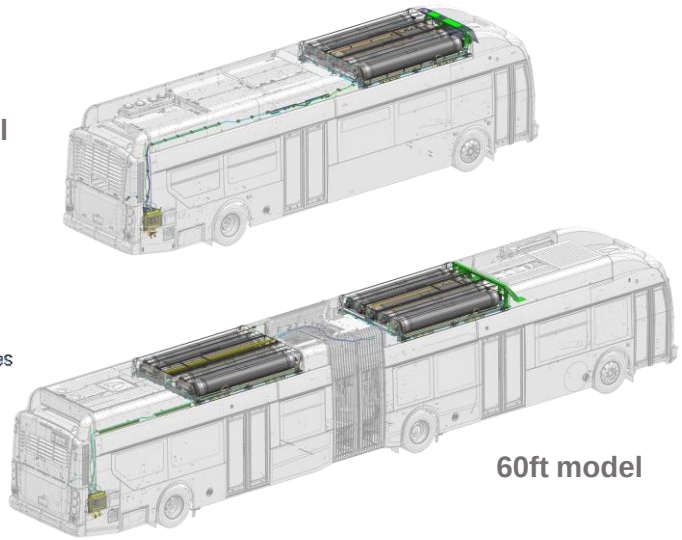

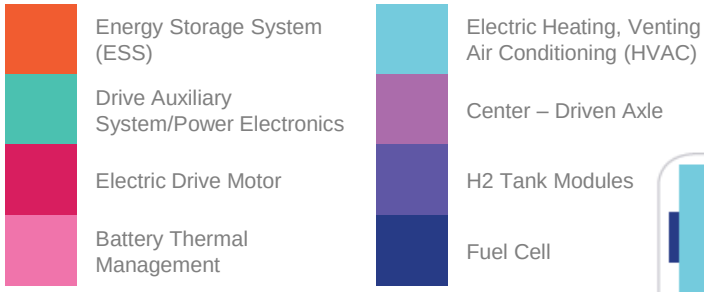

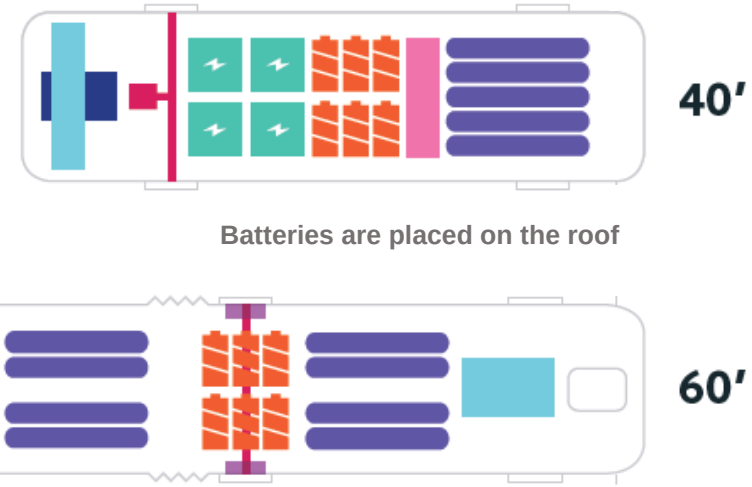

Technical Summary

	40’	60’
Fuel Cell	Ballard FCvelocity-HD85	
Equivalent Battery Energy	700 kWh	1100 kWh
Hydrogen Storage Volume	37.5 kg	60 kg
Net Power	85 kW	
Motor	Siemens ELFA 2 Electric Drive System	
Rated Power	160 kW	320 kW
Rated Torque	1,033 ft-lb	2,066 ft-lb

Performance

Altoona Range @ Seated Load Weight (40’ model)

	Manhattan	OCBC	UDDS	Average
Power Consumption (kWh/mile)	8.57	1.83	0.94	3.78
Fuel Consumption (Miles/kg)	5.32	6.91	8.33	6.86
Fuel Cell Range (Miles)	192	249	300	247
Battery Range (Miles)	7	33	64	16
Total Range (Miles)	199	282	364	263

Real Life Results

350 miles (560 km) on a single fill validated during testing in Orange County

- 9.16 miles/kg (14.66 km/kg)
- 330 miles (480 km) fuel only
- 20 miles (32 km) extended battery range

VIC | VEHICLE INNOVATION CENTER

Thank You For Joining Us Today

Discover everything you want to know about electric and automated vehicles at the virtual Vehicle Innovation Center

Don’t just own the latest technology.
Get ahead of the curve – book your next training
or tailored workforce development session at the VIC

Sign up for VIC training sessions newflyer.com/VIC